SPECIFICATION APPLIED

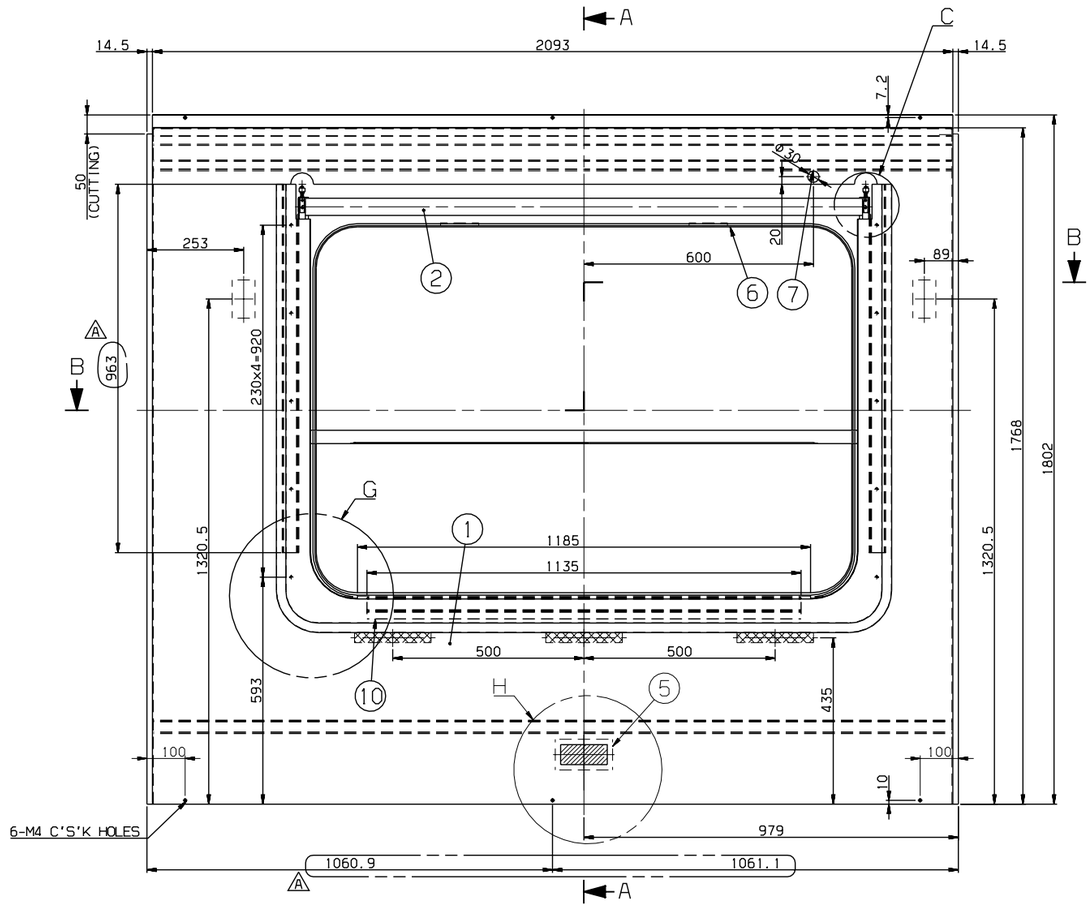


SECTION A-A

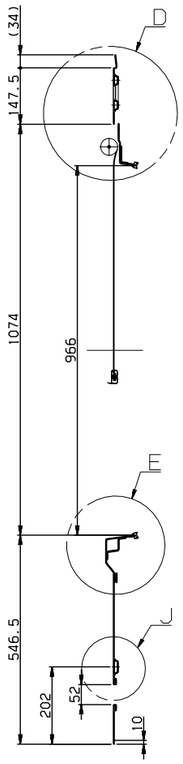


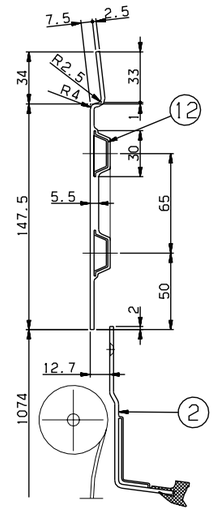


DETAIL D
SCALE=1/2

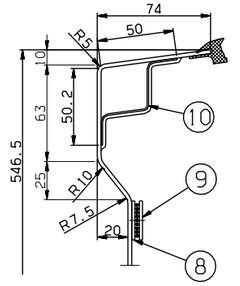


DETAIL E
SCALE=1/2

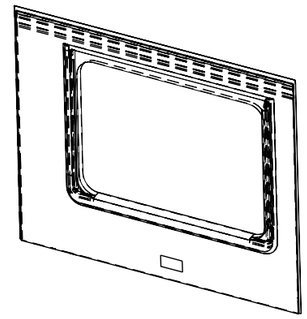

ISO VIEW

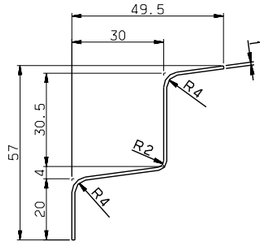


DETAIL #10
SCALE=1/1

NOTE
1. AN INTERIOR PANEL'S COLOR(RAL 7047) AND SURFACE SHALL BE MANUFACTURED AFTER SAMPLE'S APPROVAL BY CUSTOMER
2. PART 6 SHALL BE CUT ADEQUATELY AND USED
3. PART 7 IS TO PROTECT.
4. PART 8 SHALL BE WELL OPERATED UNDER CONDITION OF ASSEMBLY
5. PART 8 SHALL BE FIXED ON THE PART 1, AND PART 9 SHALL BE DELIVERED SEPERATETLY
6. THE INTERFACE BETWEEN PART 1 AND PART 2 SHALL BE STRONGLY SEALED
A 7. PART 4 SHOULD BE APPLIED WITH PART 14.

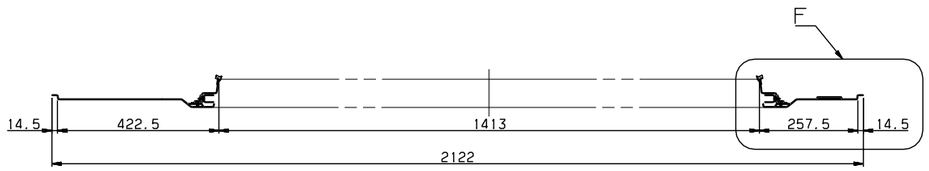


SECTION B-B

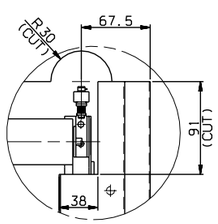


DETAIL C
SCALE=1/3

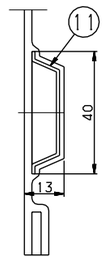


DETAIL J
SCALE=1/1

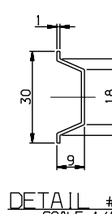


DETAIL #12
SCALE=1/1

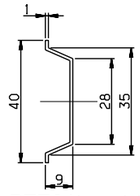


DETAIL #11
SCALE=1/1

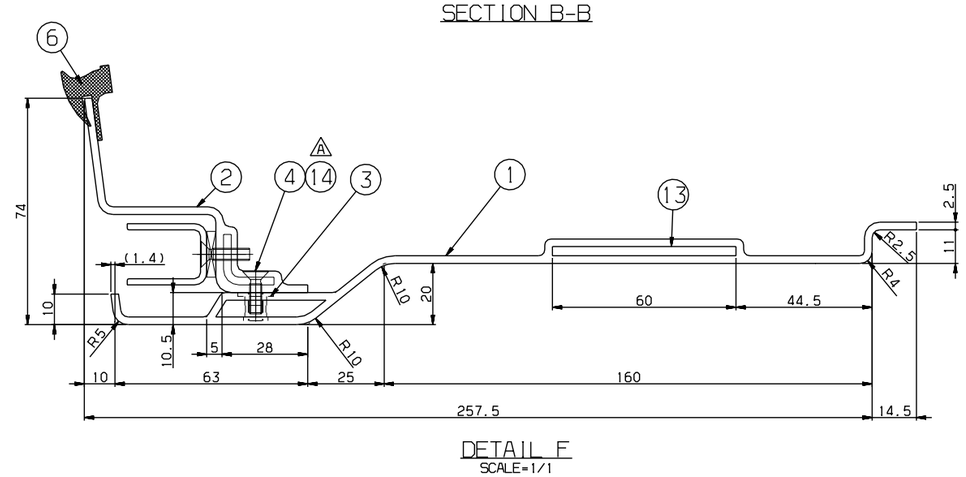


DETAIL F
SCALE=1/1

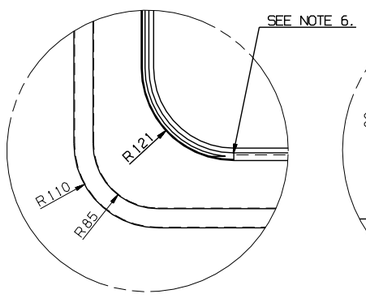


DETAIL G
SCALE=1/4

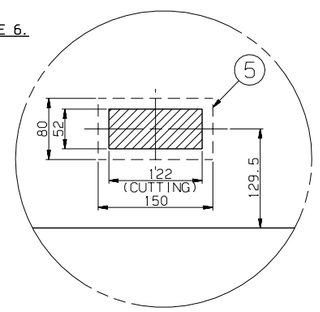


DETAIL H
SCALE=1/4

| NO. | PART NO. | DESCRIPTION | MATERIAL | Q'TY | W.T | REMARKS |
|---|---|---|---|---|---|---|
| A 14 | CP910004-406 | ADHESIVE | ASSY | 1 | | LOCTITE 242 |
| 13 | RFP51123EJ0-013 | SEAT,TAP | SUS304 | 2 | | PL,T3x100x60 |
| 12 | RFP51123EJ0-012 | STIFFENER | A1050P | 2 | | T1 |
| 11 | RFP51123EJ0-011 | STIFFENER | A1050P | 1 | | T1 |
| 10 | RFP51123EJ0-010 | STIFFENER | SUS304 | 1 | | T1,L=1135 |
| 9 | RFP51123EJ0-009 | DUAL_LOCK,FASTENER | ASSY | 3 | | 3M,SJ-3550 L=200(DUAL TAPE) |
| 8 | RFP51123EJ0-008 | DUAL_LOCK,FASTENER | ASSY | 3 | | 3M,SJ-3551 L=200(DUAL TAPE) |
| 7 | RFP90013AN0 | RUBBER,BUSH | ASSY | 1 | | F2.2332 |
| 6 | RFP51123EJ0-006 | RUBBER,SECTION | ASSY | 1 | | RFP51011AN0,L=4600 |
| 5 | RFP51123EJ0-005 | SEAT,TAP | SUS304 | 1 | | PL,T3x150x80 |
| 4 | RS60607-098S | SCREW,F.H | SUS304 | 10 | | M4x14 |
| 3 | RFP51123EJ0-003 | NUTSERT | SUS304 | 10 | | M4 |
| 2 | RFP51201EJ0 | PANEL,BLIND WINDOW,B | ASSY | 1 | | |
| 1 | RFP51123EJ0-001 | PANEL | FRP | 1 | | T2.5 |

| 승인 APP | 검도 CHK | 설계 DGN | 제도 DRG |
|---|---|---|---|
| JeongYul Lee 2014.10.14 | KeongBong Park 2014.10.14 | HeonUk Lee 2014.10.14 | HeeSook Jeong 2014.10.14 |

재질 MAT'L ASSY
중량중 G.W
일반공차 MC VD CT: B B B
SIZE A1

TITLE: WINDOW,MASK,TYPE R
도면 번호 DRG. NO: RFP51123EJ0 Ver. 00 Rev. -A
SCALE 1/8 매수 SHEET 1 of 1
RSD1402 RFP- 본-PRJT 참리번호 CATIA

HYUNDAI Rotem 현대로템주식회사

| 기호 MARK | 일자 DATE | 변경내역 DETAIL OF REVISION(E.C ZONE) | 설변번호 E.C NO. | 설계 DGN | 검도 CHK | 승인 APP |
|---|---|---|---|---|---|---|
| Ax5 | 2014.12.18 | ADDED PART NO.#14 & DIMENSION | RSD1402-U071 | H.U.LEE | K.B.PARK | J.Y.LEE |

참고REF. NO.

본 도면은 당사 재산이므로 허가없이 무단복사/배포 금지. PROPERTY OF ISSUING ENTITY. CANNOT BE DISTRIBUTED OR REPRODUCED WITHOUT AUTHORIZATION.

| 구분 CLASS | | A | B |
|---|---|---|---|
| 주조 CASTING | ~ 40 | 2 | 4 |
| | ~ 30 | 2 | 3 |
| | ~ 10 | 1 | 1.5 |
| 프레스 PRESS | < 3 | 0.5 | 1 |
| | ~3150 | - | 7 |
| | ~1600 | 4 | 5 |
| | ~ 800 | 3 | 4 |
| | ~ 400 | 2 | 3 |
| | ~ 200 | 1.5 | 2 |
| | ~ 100 | 1 | 1.5 |

| 구분 CLASS | | A | B |
|---|---|---|---|
| 주강·주물 CASTING (±) | | | |
| ~ 20M | 8 | 14 | 24 |
| ~ 15M | 7 | 12 | 21 |
| ~ 12M | 6 | 10 | 18 |
| ~ 8M | 5 | 8 | 14 |
| ~ 4M | 4 | 6 | 11 |
| ~ 2M | 3 | 4 | 8 |
| ~ 1M | 2 | 3 | 6 |
| ~ 315 | 1 | 2 | 4 |
| ~ 120 | 1 | 2 | 3 |
| ~ 30 | 1 | 1 | 1 |

| 구분 CLASS | | A | B | C |
|---|---|---|---|---|
| 용접 WELDING (±) | | | | |
| ~ 20M | - | 6.0 | 8.0 | |
| ~ 15M | - | 5.0 | 7.0 | |
| ~ 12M | - | 4.0 | 6.0 | |
| ~ 8M | - | 3.0 | 5.0 | |
| ~ 4M | 0.8 | 2.0 | 4.0 | |
| ~ 2M | 0.5 | 1.2 | 3.0 | |
| ~ 1M | 0.3 | 0.8 | 2.0 | |
| ~ 315 | 0.2 | 0.5 | 1.2 | |
| ~ 120 | 0.15 | 0.3 | 0.8 | |
| ~ 30 | 0.1 | 0.2 | 0.5 | |
| 3 ~ 6 | 0.05 | 0.1 | 0.2 | |

| 구분 CLASS | | A | B | C |
|---|---|---|---|---|
| 기계 가공품 MACHINING (±) | | | | |
| 일반사항은 일반공차표 GENERAL TOLERANCE | | | | |